BT3-8

3-3/8" NEODYMIUM HORN LOADED BULLET TWEETER

FEATURES

- 3-3/8" square faceplate for easy replacement
- High power neodymium motor for high efficiency
- Phenolic diaphragm delivers smooth and natural response
- 106 dB 1W/1m efficiency for high output even with low power

PARAMETERS

Impedance:	8 ohms
Re:	6.8 ohms
Le:	0.3 mH
Fs:	572 Hz
Qms:	N/A
Qes:	N/A
Qts:	N/A
Mms:	N/A
Cms:	N/A
Sd:	N/A
Vd:	N/A
BL:	N/A
Vas:	N/A
Xmax:	N/A
VC Diameter:	25 mm
SPL:	106 dB@2.83V/1m
RMS Power handling:	40 watts
Usable Frequency Range (Hz):	2,000 – 18,000 Hz

MECHANICAL DRAWING

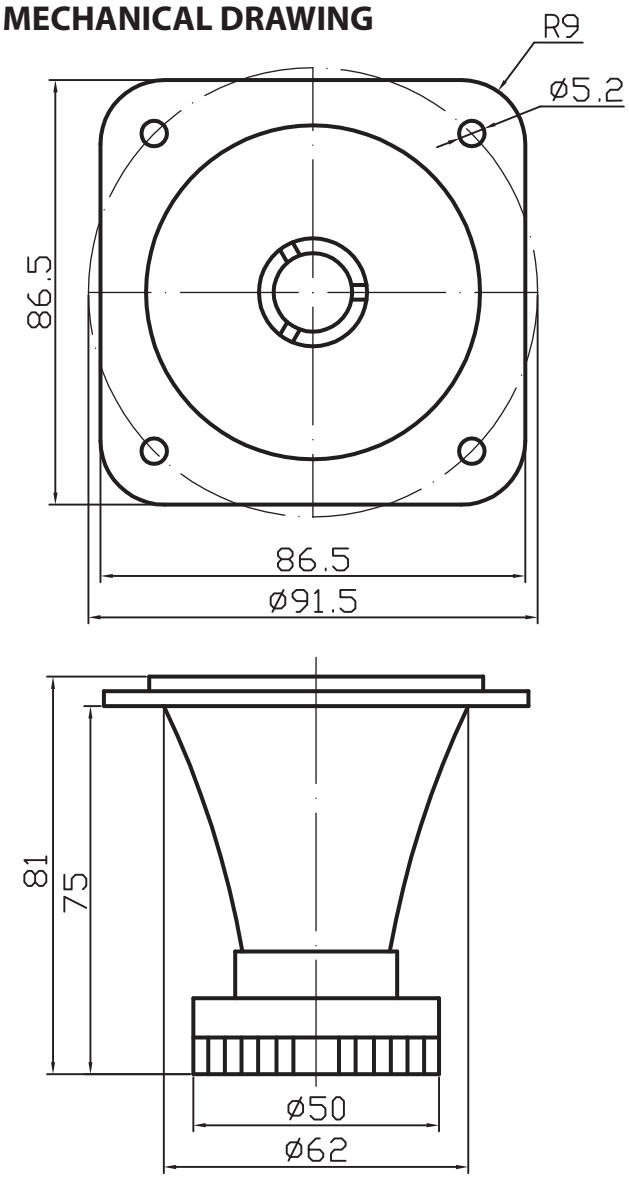

IMPEDANCE/PHASE

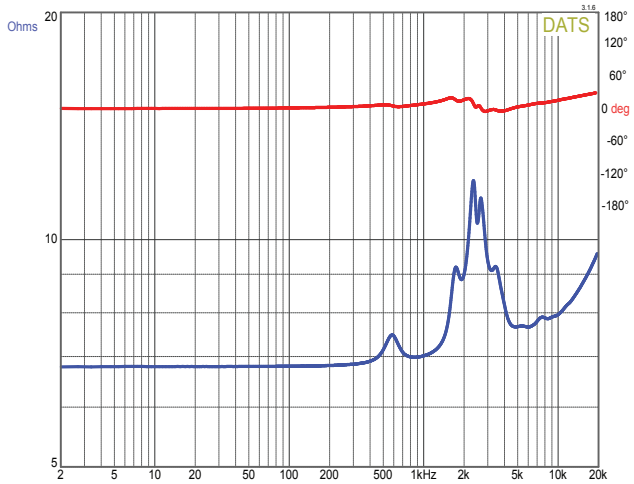

FREQUENCY RESPONSE

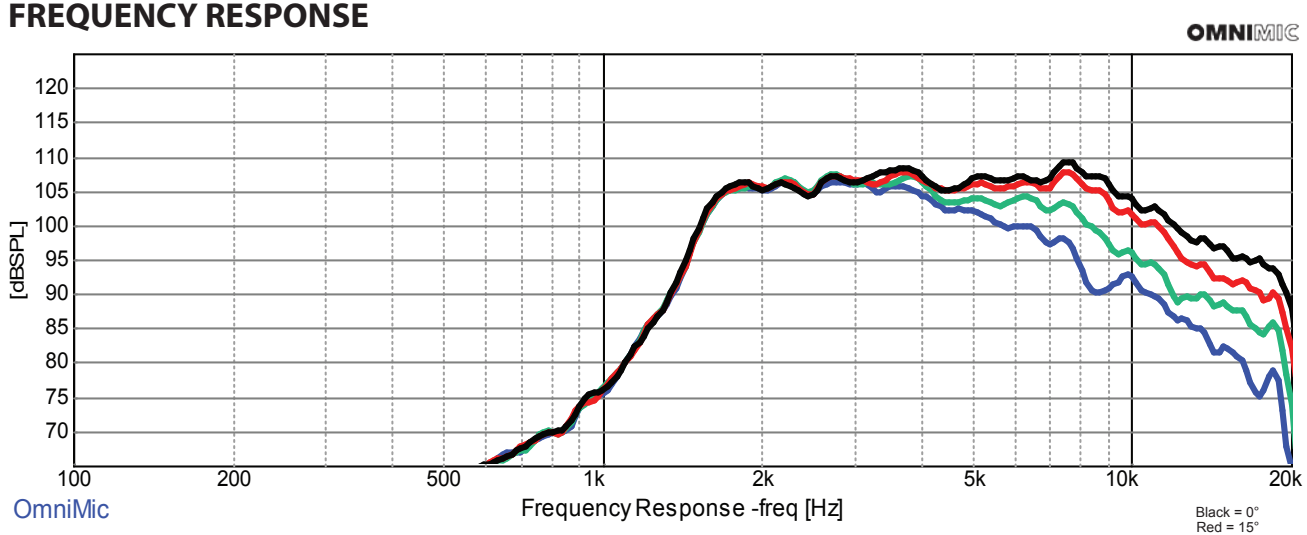

Note: 1/24th octave smoothing - nearfield response included in graph below 450 Hz.