Driver Specification Sheet

Peerless by TYMPHANY

Model No:: XXLS-P835037

Product Line: Peerless

Rev: 1

Last Update: 2017-04-25 14:32:09

Product Description

This member of the XXLS product family has all the design features suitable for a high performance, high excursion subwoofer driver. The motor features a double ferrite magnet motor, supporting high excursion, and aluminium shorting rings and pole extenders, lowering and linearizing the inductance of the overhung voice coil. The light & stiff composite paper cone is vented under the dust cap, to reduce air compression. The suspension system features a low-creep rubber surround, and a nomex spider, ensuring long-term reliability under high power conditions. The product also features a rigid cast aluminium basket.

Mechanical Drawing

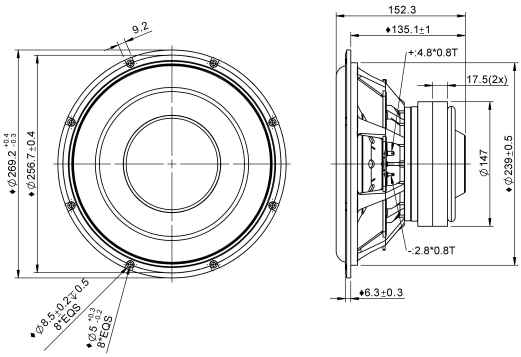

Specifications

DC Resistance	Revc	Ohms	2.71	5.0%	Energy Bandwidth Product	EBP	(1/Qes)*fs	
Minimum Impedance	Zmin	Ohms	3.57	7.5%	Moving Mass	Mms	g	93.8
Voice Coil Inductance	Le	mH	0.5		Suspension Compliance	Cms	um/N	337.9
Resonant Frequency	Fs	Hz	28.27	15%	Effective Cone diameter	D	cm	21
Mechanical Q Factor	Qms		9.83		Effective Piston Area	Sd	cm^2	346.4
Electrical Q Factor	Qes	0.45			Effective Volume	Vas	L	56.93
Total Q Factor	Qts		0.43		Motor Force Factor	BL	Tm	10.07
Ratio Fs/Qts	F	Fs/Qts	66.37		Motor Efficiency Factor	ß	(T*M^2)/Ohms	37.4
Half Space Sensitivity @2.83V	db@2.83V/1M	dB	90.02	+/- 1.0db	Voice coil former Material	VCfm		GSV
Half Space Sensitivity @1W/1M	db@1W/1M	dB	86.5	+/- 1.0db	Voice coil inner diameter	VCd	mm	51.32
Gap Height	Gh	mm	8		Rated Noise Power	P	W	120
Maximum Linear Excursion	Xmax	mm	12.3		Test Spectrum Bandwidth	20Hz - 20kHz		
Ferrofluid Type	FF				Driver Size	Inch	10 in	
Driver Mass	Kg	6.9						

Frequency and Impedance Response

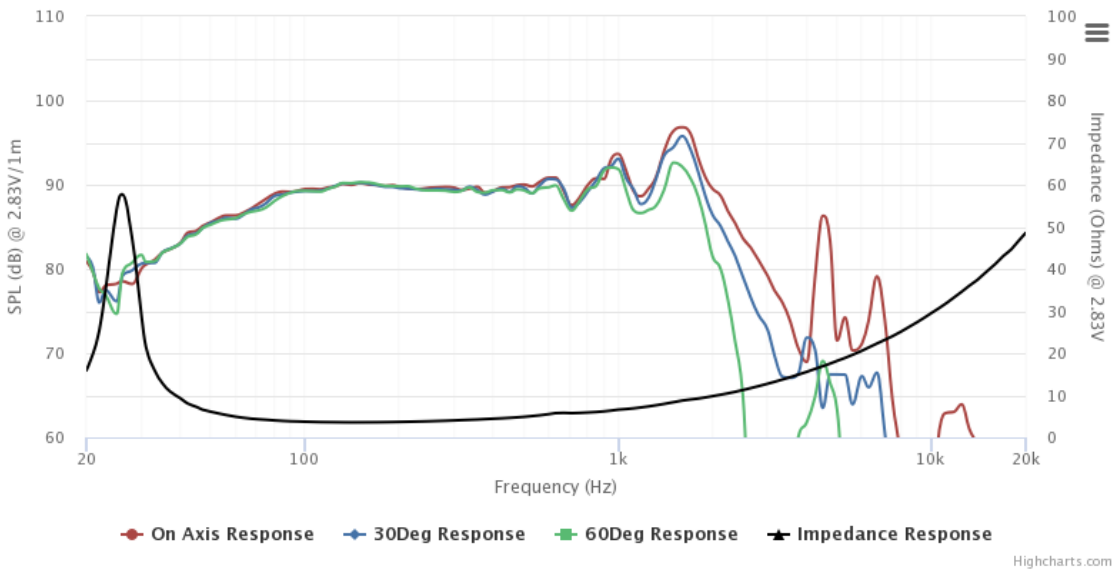

Tymphany HK LTD
Address : Room 1307-8 Dominion Centre, 43-59 Queens Rd East, Wanchai, Hong Kong
E-mail: sales@tymphany.com